ELE228 - Programming for Circuits and Systems Preliminary Work 1

1 Questions

1. Create a vector **t** between 0 and 2π with $\pi/30$ intervals and form the following sinusoidal signals:

$$x(t) = 16\sin^3(t)$$
$$y(t) = 13\cos(t) - 5\cos(2t) - 2\cos(3t) - \cos(4t)$$

Plot the signals x and y on the same figure with respect to the vector **t**. Make necessary adjustments so that you replicate *Fig. 1* as closely as possible.

2. Consider the circuit in *Fig. 2*. Obtain three independent equations for the voltages V_1, V_2, and V_3 using the node-voltage approach. Solve for the node-voltages on paper using your preferred method, such as Gaussian elimination or matrix inversion.

3. Consider the circuit in *Fig. 2* again. Arrange the node-voltage equations you wrote in the previous part in matrix form as

$$A\mathbf{V} = \mathbf{b}$$

where A is the coefficient matrix, **V** is the vector containing the unknown node voltages V_1, V_2, and V_3 and **b** is the vector of independent current sources. Solve for **V** using MATLAB and compare the result with your result from the previous part.

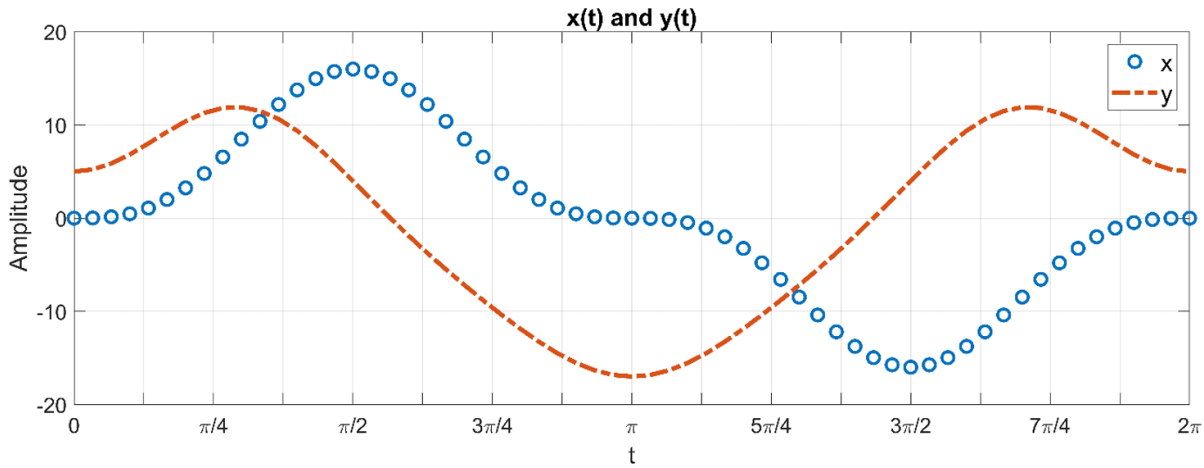

Figure 1

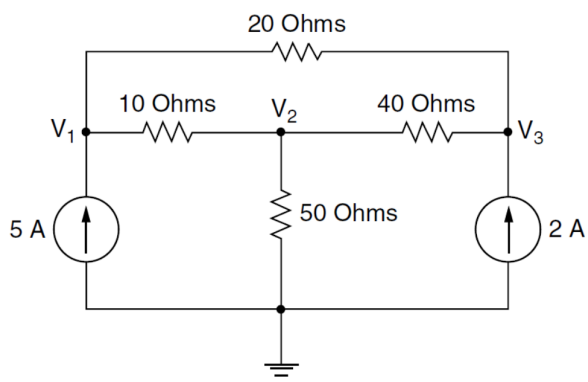

Figure 2

2 Answers

1. Code:

```
t = 0:pi/30:2*pi
x = 16*sin(t).^3
y = 13*cos(t)-5*cos(2*t)-2*cos(3*t)-cos(4*t)

set(gca,'TickLabelInterpreter','latex')
grid on
hold on
box on

plot(t, x, 'bo')
plot(t, y, 'r-.','LineWidth', 1.5)
xticks(0:pi/8:2*pi)
xticklabels({'$0$','','$\pi/4$','','$\pi/2$','','$3\pi/4$','', ...
    '$\pi$','','$5\pi/4$','','$3\pi/2$','','$7\pi/4$','','$2\pi$'})
yticks(-20:10:20)
xlim([0 2*pi])
ylim([-20 20])
legend('x','y')
xlabel('t', Interpreter='latex')
ylabel('Amplitude', Interpreter='latex')
title('\bf{x(t) and y(t)}', Interpreter='latex')

hold off
saveas(gca, 'fig1.png')
```

Figure:

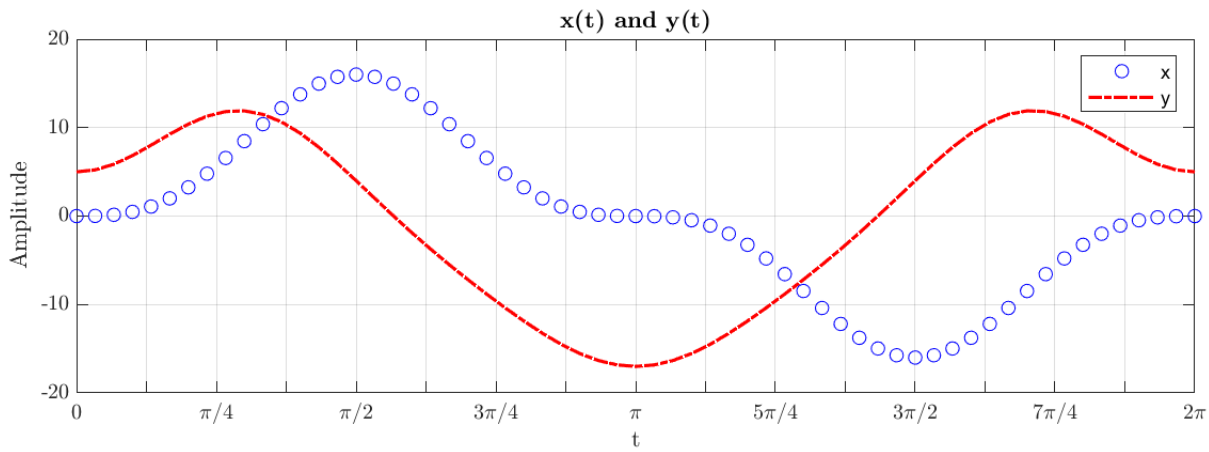

2. Obtain the node-voltage equations.

Node V_1:

$$\frac{V_1 - V_2}{10} + \frac{V_1 - V_3}{20} = 5$$
$$3V_1 - 2V_2 - V_3 = 100 \tag{1}$$

Node V_2:

$$\frac{V_2 - V_1}{10} + \frac{V_2 - V_3}{40} + \frac{V_2}{50} = 0$$
$$-20V_1 + 29V_2 - 5V_3 = 0 \tag{2}$$

Node V_3:

$$\frac{V_3 - V_1}{20} + \frac{V_3 - V_2}{40} = 2$$
$$-2V_1 - V_2 + 3V_3 = 80 \tag{3}$$

The matrix form using (1), (2), and (3):

$$\underbrace{\begin{bmatrix} 3 & -2 & -1 \\ -20 & 29 & -5 \\ -2 & -1 & 3 \end{bmatrix}}_{A} \underbrace{\begin{bmatrix} V_1 \\ V_2 \\ V_3 \end{bmatrix}}_{\mathbf{V}} = \underbrace{\begin{bmatrix} 100 \\ 0 \\ 80 \end{bmatrix}}_{\mathbf{b}},$$

where $\mathbf{V} = [V_1 \quad V_2 \quad V_3]^T$. Check if the determinant is non-zero so that the matrix is invertible.

$$|A| = \begin{vmatrix} 3 & -2 & -1 \\ -20 & 29 & -5 \\ -2 & -1 & 3 \end{vmatrix} = 3\begin{vmatrix} 29 & -5 \\ -1 & 3 \end{vmatrix} + 2\begin{vmatrix} -20 & -5 \\ -2 & 3 \end{vmatrix} - 1\begin{vmatrix} -20 & 29 \\ -2 & -1 \end{vmatrix} = 28 \neq 0$$

$$A\mathbf{V} = \mathbf{b} \implies \mathbf{V} = A^{-1}\mathbf{b}$$

Calculate the inverse of A using the cofactor method.

$$A^{-1} = \frac{1}{\det A} \underbrace{\begin{bmatrix} \begin{vmatrix} 29 & -5 \\ -1 & 3 \end{vmatrix} & -\begin{vmatrix} -2 & -1 \\ -1 & 3 \end{vmatrix} & \begin{vmatrix} -2 & -1 \\ 29 & -5 \end{vmatrix} \\ -\begin{vmatrix} -20 & -5 \\ -2 & 3 \end{vmatrix} & \begin{vmatrix} 3 & -1 \\ -2 & 3 \end{vmatrix} & -\begin{vmatrix} 3 & -1 \\ -20 & -5 \end{vmatrix} \\ \begin{vmatrix} -20 & 29 \\ -2 & -1 \end{vmatrix} & -\begin{vmatrix} 3 & -2 \\ -2 & -1 \end{vmatrix} & \begin{vmatrix} 3 & -2 \\ -20 & 29 \end{vmatrix} \end{bmatrix}}_{\operatorname{adj} A} = \frac{1}{28}\begin{bmatrix} 82 & 7 & 39 \\ 70 & 7 & 35 \\ 78 & 7 & 47 \end{bmatrix}$$

$$\mathbf{V} = A^{-1}\mathbf{b} = \frac{1}{28}\begin{bmatrix} 82 & 7 & 39 \\ 70 & 7 & 35 \\ 78 & 7 & 47 \end{bmatrix}\begin{bmatrix} 100 \\ 0 \\ 80 \end{bmatrix} = \begin{bmatrix} 404.29 \text{ V} \\ 350 \text{ V} \\ 412.86 \text{ V} \end{bmatrix}$$

Therefore, $V_1 = 404.29$ V, $V_2 = 350$ V, $V_3 = 412.86$ V.

3. Code:

```
A = [3 -2 -1; -20 29 -5; -2 -1 3]
b = [100; 0; 80]
V = A\b
```

```
V =

  404.2857
  350.0000
  412.8571
```

The result obtained in Question 2 is consistent with the one in Question 3.